Building a better future
Global Leader

www.hyundai-engine.com

HiMSEN Engine
H32/40(V)

Marine & Stationary Application

HYUNDAI HEAVY INDUSTRIES CO.,LTD. | ENGINE & MACHINERY

Earth-Friendly Engine

32/40V, 32/40 HiMSEN Family.....

Design Philosophy

Hyundai's HiMSEN 32/40 Family have simple and smart design suitable for marine applications with high reliability and performance. The key features are :

Heavy Fuel Engine with same fuel of main engine (Uni-Fuel concept).
Hence, the diesel fuel and heavy fuel oil of the viscosity of upto 700 cSt at 50°C is acceptable.

Economical and Ecological Engine with low fuel consumption, NOx emission, and Smoke, etc., which is based on the following specific designs;

- Optimized Supercharging with Miller Cycle
- High Fuel Injection Pressure

Reliable and Practical Engine with simple, smart and robust structure.

- Number of engine components are minimized with Pipe-Free design
- Most of the components are directly accessible for easier maintenance
- 'Individual Part' maintenance concept is provided
- Feed System is fully modularized with direct accessibility

Main Features

Performance characteristics
- High Output in the similar range engines
- Low Fuel Oil Consumption
- Quick acceleration & load response

Maintenance
- Easier maintenance by modularized design
- Minimal the number and kind of components

Earth-friendly engine
- Low NOx emissions
- Complies with IMO NOx Tier II
- Low Vibration & Noise

Major Application

Marine
- Propulsion System
- Generating Sets

Offshore
- Drillships
- FPSO

Stationary
- Diesel Power Plants
- Emergency Generating Sets for Nuclear Power Plants

FPSO

Drillship

Car Ferry & Passenger Vessel

Containership

Jack-up Platform/Drilling Rig

Emergency GenSets for Nuclear Power Plant

Diesel Power Plant

Reliable and Practical Engine

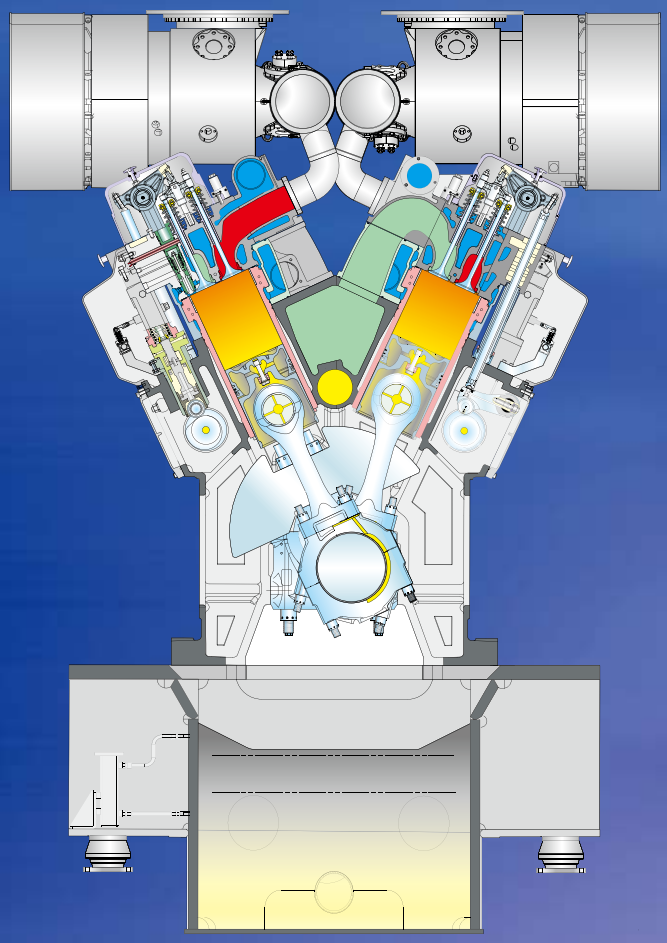

H32/40V Cross Section

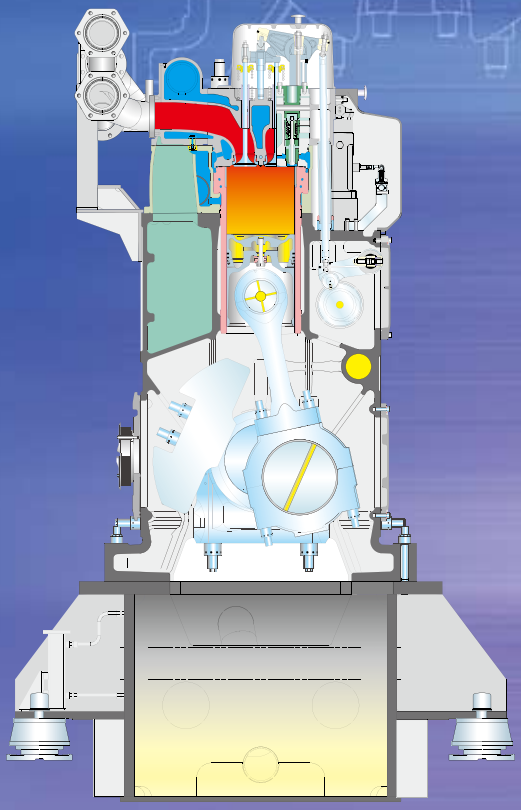

H32/40 Cross Section

Main Data

No. of Cylinder In-line type	6, 7, 8, 9
No. of Cylinder V-type	12, 14, 16, 18, 20
Rated Speed	720 /750 rpm
Power per Cylinder	500 kW
Cylinder Bore	320 mm
Piston Stroke	400 mm
Mean Piston Speed	9.6/ 10.0 m/s
Mean Effective Pressure	25.9/24.9 bar
Compression Ratio	15:1

Major Advantages

Structure Design for Easier Maintenance

- Modularized Feed System
- Simple Fuel Injection System
- Larger Openings

Rigid Frame for Lower Vibration Level & Higher Reliability

Robust Cyl. Block

Base Frame

- Vibration Optimized
- Project Base
- Rigid & Resilient Mounting

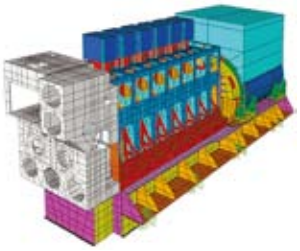

Feed Block provides Stable Turbocharger Mounting

Fuel Injection Equipment

Simple & Robust Fuel Injection system

- Simple
- Directly Accessible

Supercharging System

Big Air Chamber

Pulse type Exh. Duct ▶
Better Acceleration
and Part Load Performance

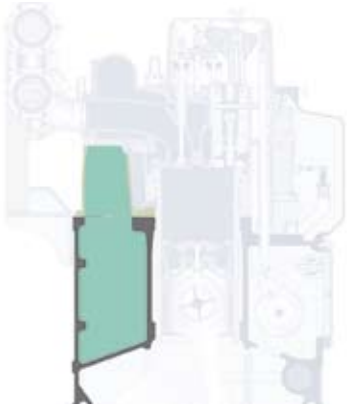

IMO NOx Emission Limits

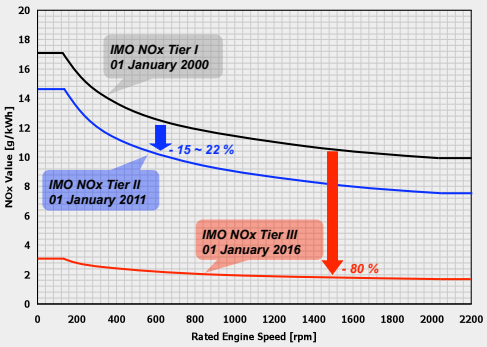

IMO NOx Tier II for HiMSEN

- **How to comply with IMO NOx Tier II ?**
  - Optimized design of fuel injection system and piston
  - Adjustment of valve and injection timing
  - High efficiency turbocharger
  - Improved air cooler
  - Others

Rated Power for Genset

Engine Type	Rated Output (kW)			
	720 rpm/60Hz		750 rpm/50Hz	
	Engine	Generator	Engine	Generator
6H32/40	3,000	2,880	3,000	2,880
7H32/40	3,500	3,360	3,500	3,360
8H32/40	4,000	3,840	4,000	3,840
9H32/40	4,500	4,320	4,500	4,320

• Remarks :

1) The permissible overload is 10% for one hour every twelve hours.
2) The alternator outputs are calculated by an efficiency of 96% and a power factor of 0.8 lagging
3) Power adjusting upto -5 % derating and upto +2 % uprating is generally accepted, other power adjusting must be consulted with engine builder.

Dimension and Weight

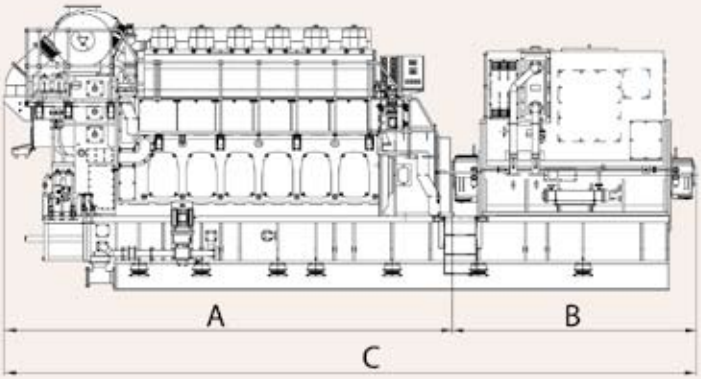

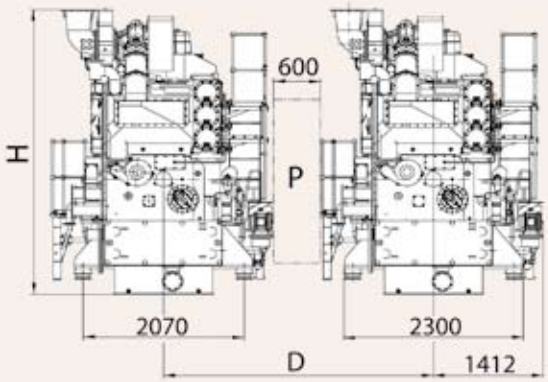

720 / 750rpm

Engine Type	Dimension (mm)				Dry Weight (ton)	
	A	B 1)	C 1)	H	Engine 2)	Genset 1). 3)
6H32/40	5,760	3,130	8,890	3,959	33.7	68.6
7H32/40	6,112	3,374	9,486	4,130	38.6	77.1
8H32/40	6,602	3,594	10,196	4,130	41.5	82.0
9H32/40	7,092	4,097	11,189	4,130	44.6	89.1

• Remarks :

1) : Depending on alternator.
2) : Without common base frame.
3) : With common base frame & alternator. (Maker : HHI-EES)

D : Min. distance between engines 3,408 mm (with gallery).

P : Free passage between the engines, width 600 mm and height 2,000 mm.

Note) All dimensions and weight are approximate value and subject to change without prior notice.

Specific Fuel Oil Consumption at Engine

Load	720 rpm	750 rpm
100%	179 g/kWh	181 g/kWh

• Remarks :

1) SFOC tolerance +5 %
2) Without engine driven pumps (L.O, H.T, L.T pump)
3) Warranted at 100 % load only

Specific Lubricating Oil Consumption

Lub. Oil : 0.7 g/kWh

(Tolerance : +25 % depending on the operating conditions)

H32/40V

Rated Power for Genset

Engine Type	Rated Output (kW)			
	720 rpm/60Hz		750 rpm/50Hz	
	Engine	Generator	Engine	Generator
12H32/40V	6,000	5,760	6,000	5,760
14H32/40V	7,000	6,720	7,000	6,720
16H32/40V	8,000	7,680	8,000	7,680
18H32/40V	9,000	8,640	9,000	8,640
20H32/40V	10,000	9,600	10,000	9,600

• Remarks :

1) The permissible overload is 10 % for one hour every twelve hours.
2) The alternator outputs are calculated for an efficiency of 96 % and a power factor of 0.8 lagging.
3) Power adjusting upto -5 % derating and upto +2 % uprating is generally accepted, other power adjusting must be consulted with engine builder.

Dimension and Weight

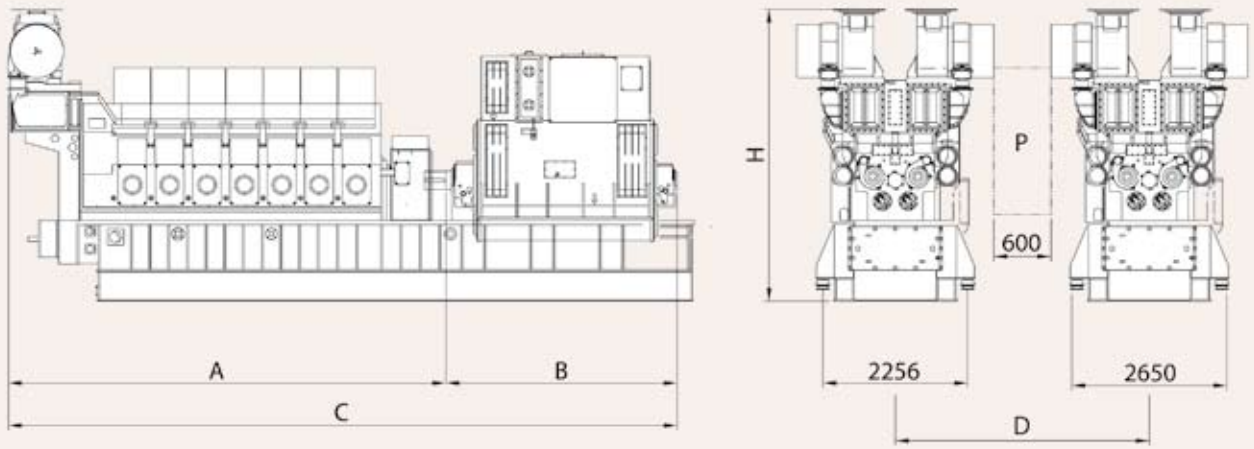

720 / 750rpm

Engine Type	Dimension (mm)				Dry Weight (ton)	
	A	B 1)	C 1)	H	Engine 2)	Genset 1), 3)
12H32/40V	6,624	3,760	10,384	4,723	56.0	108.8
14H32/40V	7,295	3,860	11,155	4,723	63.3	121.3
16H32/40V	7,914	3,479	11,393	4,723	69.1	130.9
18H32/40V	8,585	3,859	12,444	4,794	76.3	141.2
20H32/40V	9,344	3,659	13,003	4,794	84.0	153.9

• Remarks :

1): Depending on alternator.
2): Without Common base frame.
3): With common base frame & alternator. (Maker : HHI-EES)

D : Min. distance between engines 4405 mm (with gallery)
P : Free passage between the engines, width 600mm and height 2,000 mm.
Note) All dimensions and weight are approximate values and subject to change without prior notice.

Specific Fuel Oil Consumption at Engine

Load	720 rpm	750 rpm
100%	179 g/kWh	181 g/kWh

• Remarks :

1) SFOC tolerance +5 %
2) Without engine driven pumps (L.O, H.T, L.T pump)
3) Warranted at 100 % load only

Specific Lubricating Oil Consumption

Lub. Oil : 0.7 g/kWh
(Tolerance : +25 % depending on the operating conditions)

H32/40P

General Information

Long Term Commitment...

To provide the market with reliable, cost effective and earth-friendly solution

- **Optimized Matching of HiMSEN Propulsion Package**

- **HiMSEN** H32/40P engine
- C.P./F.P. propeller with shafting
- Pitch and speed control
- Load control
- Reduction gear
- Shaft generator
- Auxiliary machinery

- **Marine Propulsion**

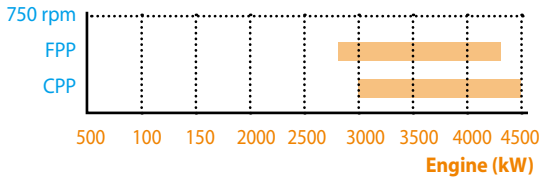

- **Application**

- Controllable pitch propulsion
- Fixed pitch propulsion
- Azimuth thruster propulsion
- Pump drive

- **Excellent Performance of HiMSEN Propulsion Engine**

- Improved transient operation with pulse charging turbocharger
- Invisible smoke with pulse charging turbocharger by part load matching
- Lower thermal load engine with lower exhaust gas temperature
- Low fuel consumption
- Low NOx emission

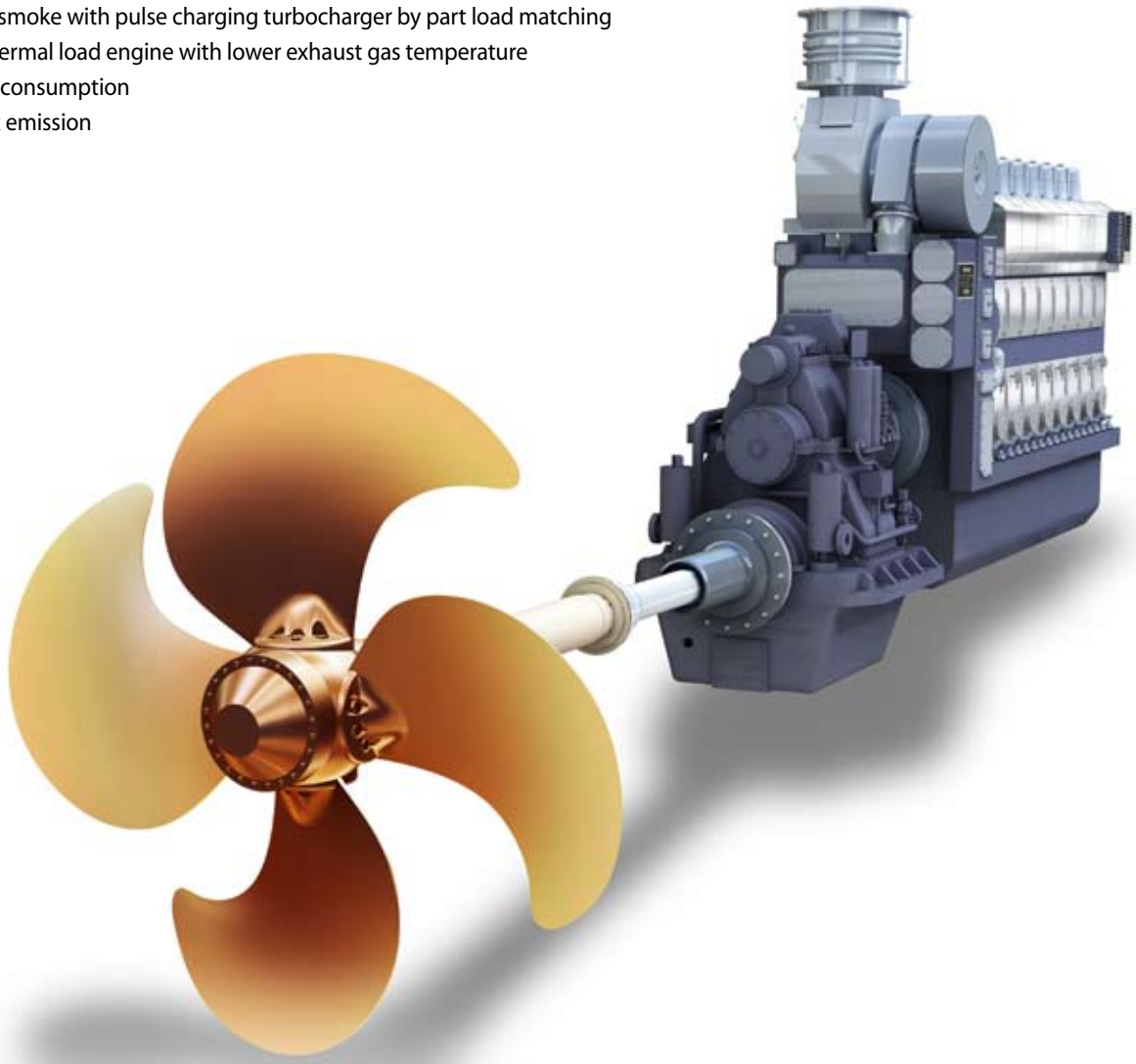

Marine Propulsion System

- **Controllable Pitch Propeller**

Permit high skew angles to minimize noise and vibration.

- **Fixed Pitch Propeller**

Guarantee optimum thrust, minimal noise and vibration level.

Specific Fuel Oil Consumption at 100% Engine Load: 181 g/kWh

- Remarks :

1) SFOC tolerance +5 %
2) Without engine pumps (L.O, H.T, L.T pump)
3) Warranted at 100 % load only.
   Guarantee optimum thrust, minimal noise and vibration level.

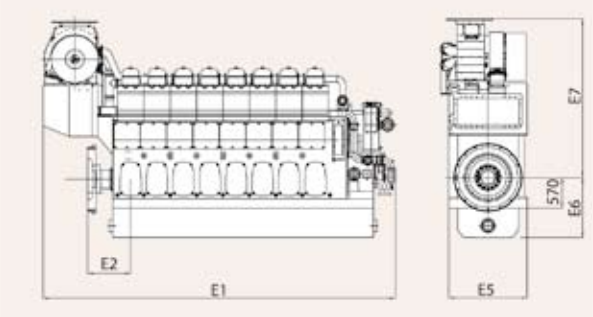

Dimensions

	Cyl,	Engine Dimension (mm) & Dry Weight (ton)					
		E1	E2	E5	E6	E7	Dry Weight
750 rpm	6	5,515	800	1,460	1,110	3,295	35,7
	8	6,545	800	1,460	1,110	3,495	43,5
	9	7,085	800	1,460	1,110	3,495	46,6

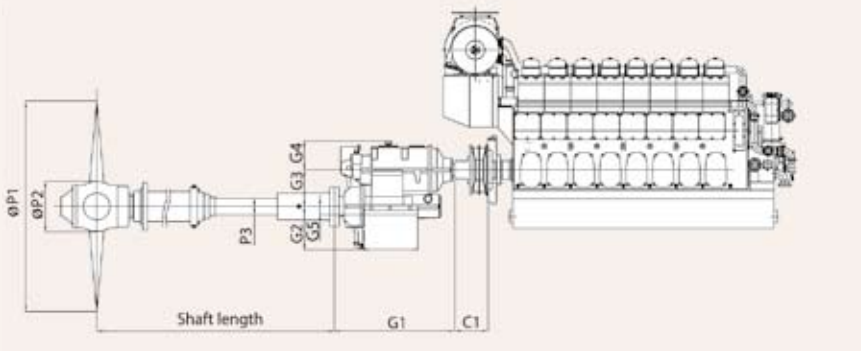

Dimensions

Engine Type Rated Output at Engine (kW)	CPP Package System		Gear ratio	Propeller speed	Propeller & Hub Dimension (mm)			Gear Box & Coupling Dimension (mm) & Dry Weight (kg)							Typical Vessel (DWT)
	Gear box model vertical offset	Hub model	n:1	rpm	P1	P2	P3	G1	G2	G3	G4	G5	C1	Gear Dry Weight	14 knots
6H32/40P 750rpm 2,880 kW/FPP 3,000 kW/CCP	ACG750	ECP85	4.65	155	3,900	865	280	2,710	850	750	540	220	622	13,000	7,000 ton Tanker
8H32/40P 750rpm 3,840 kW/FPP 4,000 kW/CCP	ACG950	ECP105	5.33	135	4,400	1,065	330	2,710	1,030	950	540	220	622	16,500	9,000 ton Tanker
9H32/40P 750rpm 4,320 kW/FPP 4,500 kW/CCP	ACG950	ECP105	5.76	125	4,800	1,065	330	2,710	1,030	950	540	220	690	16,500	10,000 ton Tanker

Remarks : Typical ship parameters, Speed : 14.0 knots

H32/40

Stationary

Rated Power for Genset

Engine Type	Rated Output (kW)			
	720 rpm/60Hz		750 rpm/50Hz	
	Engine	Generator	Engine	Generator
6H32/40	2,850	2,750	2,850	2,750
7H32/40	3,325	3,203	3,325	3,203
8H32/40	3,800	3,667	3,800	3,667
9H32/40	4,275	4,125	4,275	4,125

• Remarks :

1) The alternator outputs are calculated for an efficiency of 96.5 % and a power factor of 0.8 lagging.
2) Power adjusting upto -5 % derating is generally accepted, other power adjusting must be consulted with engine builder.
3) In case of diesel oil (Distillate Fuels ISO 8217 DM Grade) operation continuously, 500 kW/cyl. is available.

Dimension and Weight

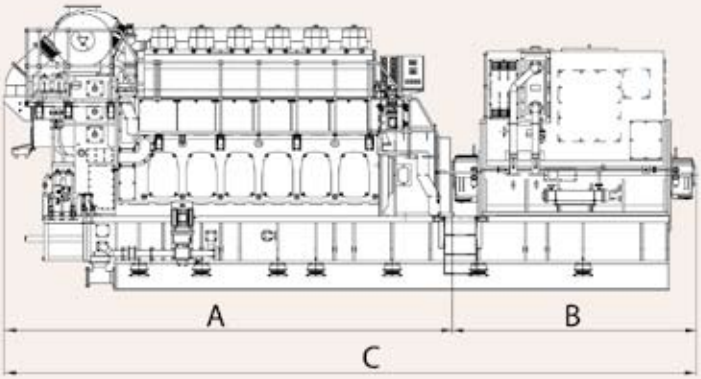

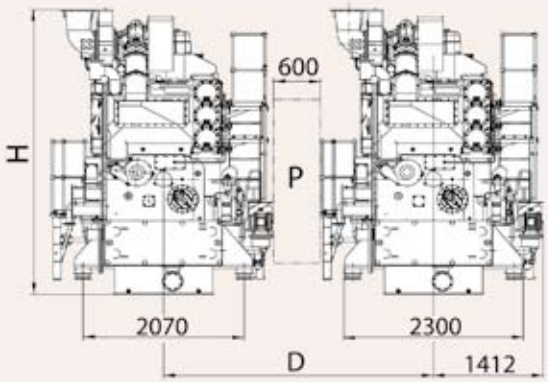

720 / 750rpm

Engine Type	Dimension (mm)				Dry Weight (ton)	
	A	B 1)	C 1)	H	Engine 2)	Genset 1). 3)
6H32/40	5,760	3,130	8,890	3,959	33.7	68.6
7H32/40	6,112	3,374	9,486	4,130	38.6	77.1
8H32/40	6,602	3,594	10,196	4,130	41.5	82.0
9H32/40	7,092	4,097	11,189	4,130	44.6	89.1

• Remarks :

1) : Depending on alternator.
2) : Without common base frame.
3) : With common base frame & alternator. (Maker : HHI-EES).

D : Min. distance between engines 3,408 mm (with gallery).

P : Free passage between the engines, width 600 mm and height 2,000 mm.

Note) All dimensions and weight are approximate value and subject to change without prior notice.

Specific Fuel Oil Consumption at Engine

Load	720 rpm	750 rpm
100%	178 g/kWh	180 g/kWh

• Remarks :

1) SFOC tolerance +5 %
2) Without engine driven pumps (L.O, H.T, L.T pump)
3) Warranted at 100 % load only

Heat Rate

Load	Unit	720 rpm	750 rpm
100%	kJ/kWh^{m}	7,600	7,686
	kJ/kWh^{e}	7,876	7,965

Specific Lubricating Oil Consumption

Lub. Oil : 0.7 g/kWh

(Tolerance : +25 % depending on the operating conditions)

H32/40V

Rated Power for Genset

Engine Type	Rated Output (kW)			
	720 rpm/60Hz		750 rpm/50Hz	
	Engine	Generator	Engine	Generator
12H32/40V	5,700	5,529	5,700	5,529
14H32/40V	6,650	6,450	6,650	6,450
16H32/40V	7,600	7,372	7,600	7,372
18H32/40V	8,550	8,243	8,550	8,243
20H32/40V	9,500	9,215	9,500	9,215

• Remarks :

1) The alternator outputs are calculated for an efficiency of 97 % and a power factor of 0.8 lagging.
2) Power adjusting upto -5 % derating is generally accepted, other power adjusting must be consulted with engine builder.
3) In case of diesel oil (Distillate Fuels ISO 8217 DM Grade) operation continuously, 500 kW/cyl. is available.

Dimension and Weight

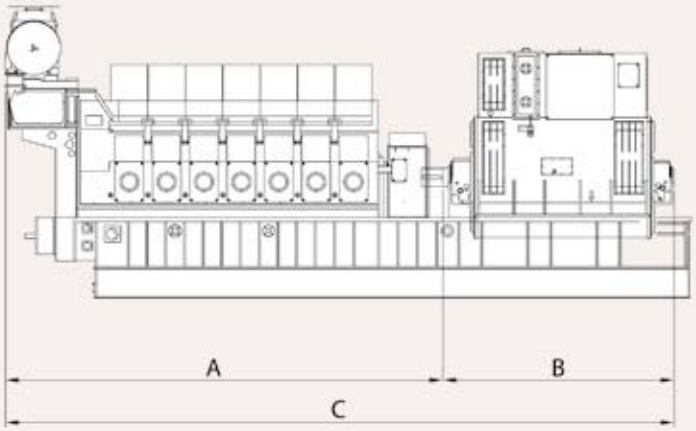

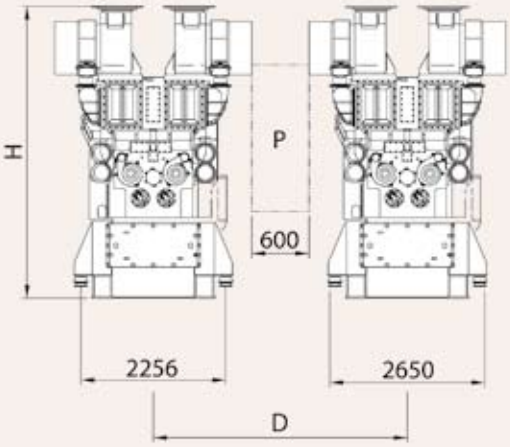

720 / 750rpm

Engine Type	Dimension (mm)				Dry Weight (ton)	
	A	B 1)	C 1)	H	Engine 2)	Genset 1), 3)
12H32/40V	6,624	3,760	10,384	4,723	56.0	108.8
14H32/40V	7,295	3,860	11,155	4,723	63.3	121.3
16H32/40V	7,914	3,479	11,393	4,723	69.1	130.9
18H32/40V	8,585	3,859	12,444	4,794	76.3	141.2
20H32/40V	9,344	3,659	13,003	4,794	84.0	153.9

• Remarks :

1): Depending on alternator.
2): Without Common base frame.
3): With common base frame & alternator. (Maker : HHI-EES).

D : Min. distance between engines 4,405 mm (with gallery).
P : Free passage between the engines, width 600 mm and height 2,000 mm.
Note) All dimensions and weight are approximate value and subject to change without prior notice.

Specific Fuel Oil Consumption at Engine

Load	720 rpm	750 rpm
100%	179 g/kWh	181 g/kWh

• Remarks :

1) SFOC tolerance +5 %
2) Without engine driven pumps (L.O, H.T, L.T pump)
3) Warranted at 100 % load only

Heat Rate

Load	Unit	720 rpm	750 rpm
100%	kJ/kWh^{m}	7,643	7,729
	kJ/kWh^{e}	7,880	7,968

Specific Lubricating Oil Consumption

Lub. Oil : 0.7 g/kWh
(Tolerance : +25 % depending on the operating conditions)

Technology Acceptance

Model Type	Technology Acceptance
H32/40V	ABS, BV, CCS, DNV, GL, KR, LR,
H32/40	ABS, BV, DNV, KR, NK, GL, LR, NK, RINA

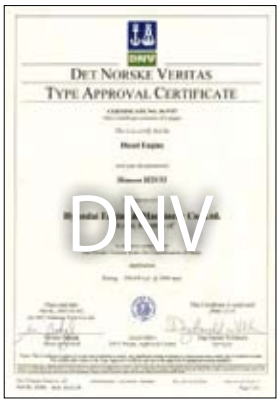

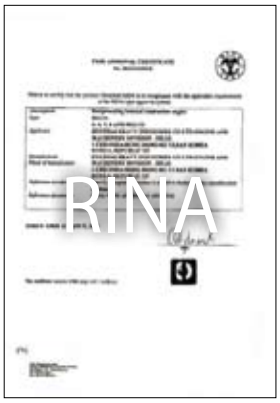

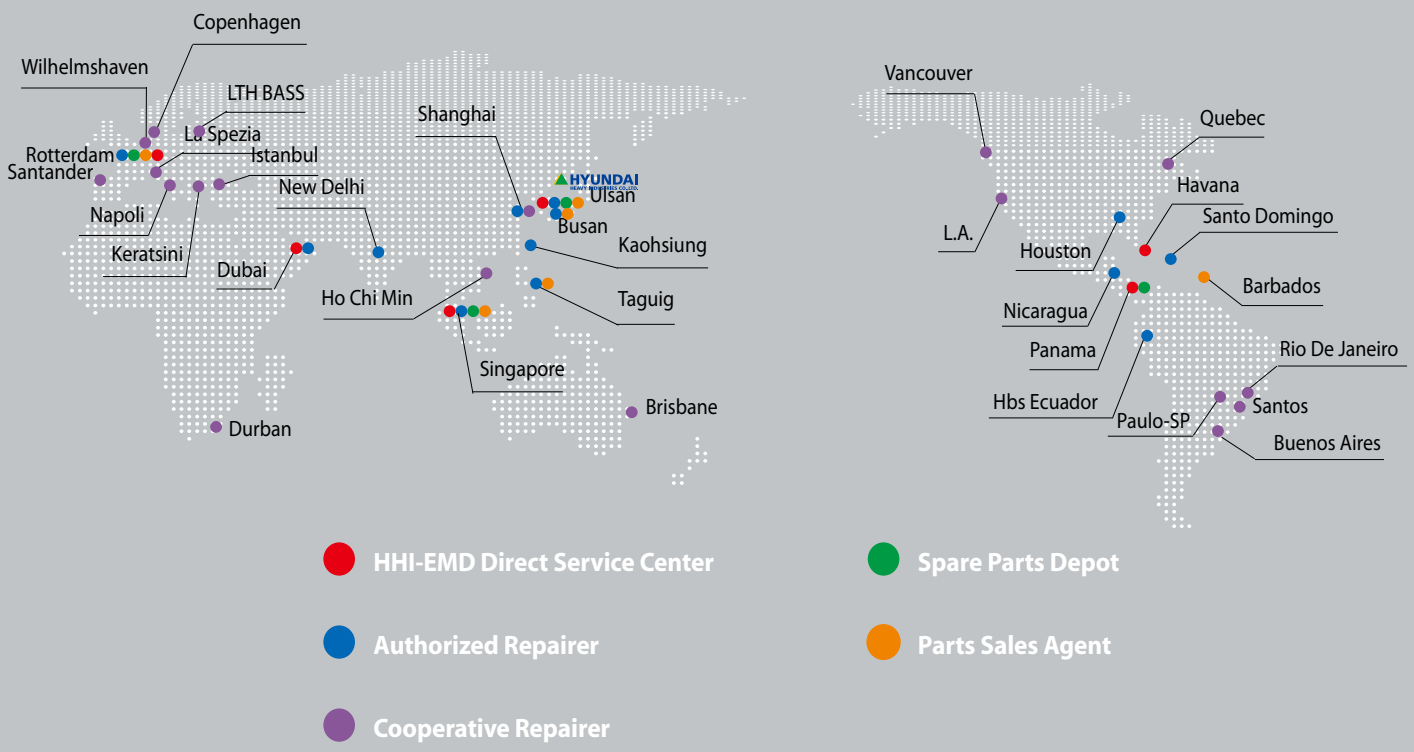

Global Service Network

Engine CS Department

Management Board
K.H. Kim, *Senior Vice President*
Phone: +82 52 202 0252
E-mail: kimkh@hhi.co.kr

Department Head
S.G. Cha, *General Manager*
Phone: +82 52 202 7411
E-mail: enginecs@hhi.co.kr

HiMSEN & Global Patrol Service Team
S.L. Choi, *Team Leader*
Phone: +82 52 202 7313
E-mail: slchoi@hhi.co.kr

MAN Service Team
A.M. Kim, *Team Leader*
Phone: +82 52 202 7418
E-mail: amkim@hhi.co.kr

Power Plant Service Team
H.J. Song, *Team Leader*
Phone: +82 52 202 7583
E-mail: hjdpp@hhi.co.kr

Wartsila Service Team
K.U. Song, *Team Leader*
Phone: +82 52 202 7412
E-mail: kusong@hhi.co.kr

Parts & Technical Service Team
H.L. Oh, *Team Leader*
Phone: +82 52 202 9457
E-mail: hloh@hhi.co.kr

CS Planning Team
J.H. Jung, *Team Leader*
Phone: +82 52 202 7586
E-mail: kevin@hhi.co.kr

Direct Service Center

Singapore — Country Code: +65
7 Temasek Blvd.
#41-02 Suntec Tower
One Singapore 038987,
Singapore
J.H. Ahn, *DGM*

Phone: +65 6 337 2366
Telefax: +65 6 337 8966
E-mail: engineas@hhisgp.com

Mobile: +65 9732 4593

Netherlands — Country Code: +31
Folkert Elsingastraat 7
3067NW, Rotterdam,
The Netherlands
J.S. Lee, *GM*
J.B. Cha, *Manager*
B.K. Kang, *Manager*

Phone: +31 10 212 1567
Telefax: +31 10 212 5134
E-mail: jsyi@hhi.co.kr
Mobile: +31 6 5184 6737
Mobile: +31 6 2013 6371
Mobile: +31 6 5183 2818

Cuba — Country Code: +53
Calle 17A No.67 e/174 y190,
Cubanacan, Playa,
Ciudad De La Habana, Cuba
I.K. Ryu, *GM*

Phone: +53-7204-3011
E-mail: ikryu@hhi.co.kr

Mobile: +53 5 286 7712

UAE(Dubai) — Country Code: +971
Level 2, Unit 205, Emaar Square
Building 4, Sheikh Zayed Road
P.O. Box 252458, Dubai, U.A.E
K.S. Jang, *GM*

Phone: +971 4 425 7995
Telefax: +971 4 425 7996
E-mail: j007@hhi.co.kr
Mobile: +971 50 652 9492

Panama — Country Code: +507
Ave. Samuel Lewis, EDIF.
HSBC, Piso 12, Obarrio,
Panama City, Rep of Panama
B.O. Cheong, Senior Vice President
H.W. Ahn, *DGM*

Phone: +507 213 7657
Telefax: +507 213 7660
E-mail: yeoyu21@hhi.co.kr
Mobile: +507 6673 0040

Global Service Network

Authorized Repairer

Korea — Country Code: +82

D.S.K Co., Ltd.
141-61 Namhang-dong
3(sam)-ga, Yeongdo-gu,
Busan, Korea
Jong-Seok, Hwang, *President*
Phone: +82 51 417 7800
Telefax: +82 51 417 7833
E-mail: dsk@dskworld.com

Hyundai Tech
1556-8, Samsan-dong,
Nam-gu, Ulsan,
Korea
Bong-Kil, Kim, *President*
Phone: +82 52 260 3731
Telefax: +82 52 260 3735
E-mail: bkkim@hotmail.com

DECCO Co., Ltd.
792, Daedae-ri
Ungchon-myeon, Ulju-gun,
Ulsan, Korea
Dong-Jun, Lee, *President*
Phone: +82 52 225 0330
Telefax: +82 52 225 0348
E-mail: dongjin@decco.co.kr

HOHYUN
808 Apartment Factory,
812-1, Hyomun-dong, Buk-gu,
Ulsan, Korea
Sang-Yoon, Lee, *President*
Phone: +82 52 288 6398
Telefax: +82 52 289 6397
E-mail: nmcoltd@hanmail.net

BaekSan Tech Co., Ltd.
2F, 231-6, Daebock-ri,
Ungchon-myeon, ulju-kyn,
Ulsan, Korea
Doo-Young, Kim, *President*
Phone: +82 52 221 0717
Telefax: +82 52 221 0716
E-mail: bs@baeksantech.com

Sun Jin Jong Hap Co., Ltd.
#40, Daepyeong-dong 2-ga ,
Yeongdo-gu, Busan, Korea
Young-Chul Kim, *President*
Phone: +82 51 414 7300
Telefax: +82 51 414 8870
E-mail: sjjh@sunjinjonghap.com

O-Sung Entec Co., Ltd.
201 Chung Hae Bldg.,
1213-15, Choryang 1-dong,
Dong-gu, Busan, Korea
Chang-Bae Kim, *President*
Phone: +82 51 442 2913
Telefax: +82 51 442 2914
E-mail: osentec@hanmail.net

Hwa San Co., Ltd.
1263-9, Mugeo-dong ,
Nam-gu, Ulsan, Korea
Jea-Koung Lee, *President*
Phone: +82 52 247 7155
Telefax: +82 52 247 7125
E-mail: hwasan01@korea.com

Sunwoo Engineering Co., Ltd.
609-1, SeokSan-li, Dong-myeon,
Yangsan-Si, KyungSangNam-Do,
626-821, Korea
Jong-Gill Jeong, *President*
Phone: +82 55 365 7333
Telefax: +82 55 365 7334
E-mail: youna3921@nate.com

KOL
5-16, Cheong-hak,
Yeongdo-Gu, Busan, Korea
Sung Ki, Hwang
Phone: +51 413 8121
Telefax: +51 413 8126
E-mail: eng@korol.co.kr

CS Engineering
678-17 Jeonha-dong
Dong-gu, Ulsan, Korea
Cha Su, Jang
Phone: +82 52 232 9997
Telefax: +82 52 232 9997
E-mail: hana9997@hanmail.net

Marine Tech
61-5 Ungnam-dong,
Changwon-Si, Kyungnam, Korea
B.H. Eom
Phone: +82 55 274 0411~2
Telefax: +82 55 274 0413
E-mail: tskim@martech.co.kr

Authorized Repairer / Asia

Singapore — Country Code: +65

Welmet Dongjin Eng.
No.53 Gul Circle,
Singapore 629584
Steve Ho W. K, *MD*
Phone: +65 6897 8511
Telefax: +65 6897 9528
Mobile: +65 9666 3188 / 9297 9727
E-mail: steve.ho@welmet.com.sg

A-Marine & Engineering Pte Ltd.
11 Tuas View Close
Singapore 637487
Yong Yeow Eddie Tan, *MD*
Phone: +65 6863 1639
Telefax: +65 6863 0541
E-mail: amarine@singnet.com.sg

VIKI Engineering Pte Ltd.
101 Cecil Street #20-10,
Tong Eng Bldg.
Singapore 069533
Sung-Wan Ryu, *MD*
Phone: +65 6 220 7366
Telefax: +65 6 220 0260
Mobile: +65 9 732 1506
E-mail: vikieng@hotmail.com

Goltens Singapore Pte Ltd.
No.6A Benoi Road
Singapore 629881
Tom Boyle, *MD*
Phone: +65 6 861 5220
Telefax: +65 6 861 1037
Mobile:+65 9 732 1506
E-mail: singapore@goltens.com

China — Country Code: +86

Goltens Shanghai Co., Ltd.
Block No.5,
No.533 Yuanzhong Road ,
Nanhui Industrial Zone,
Nanhui District,
Shanghai 201300, China
Phone: +86 21 5818 6628
Telefax: +86 21 5818 6633
E-mail: shanghai@goltens.com

Taiwan — Country Code: +886

Jing Ming Engineering Enterprises Co., Ltd.
43, Lane 9,Shin Sheng Road,
Chien Chen Dist.,
Kaohsiung 806, Taiwan
Yung-Sen Pao, *President*
Phone: +886 7 815 4256
Telefax: +886 7 815 4259
E-mail: jm7976@ms14.hinet.net

Philippines — Country Code: +63

Fil Sung Tech.
223-225 Mangosteen Road,
FTI Comples, Taguig City,
Philippines
Ik-Hyo Jeon, *President*
Phone: +63 2 837 7594
Telefax: +63 2 837 7596
E-mail: filsung@gmail.com

Authorized Repairer / Middle East, Europe

UAE(Dubai) — Country Code: +971

Goltens Service Co., Ltd.
P.O. BOX 2811, Dubai, U.A.E
Jan Erik Granholdt
Phone: +971 4 324 1642
Telefax: +971 4 324 1019
E-mail: dubai@goltens.com

Nico international U.A.E.
Al Quoz Industrial Area
P.O. Box - 12068 Dubai, U.A.E
S Tariq Anis
Phone: +971 4 338 2135
Telefax: +971 4 338 1832
E-mail: nicouae@nicouae.com

Netherlands — Country Code: +31

Wetering Rotterdam
Bunschotenweg 134,
3089 KC Rotterdam,
The Netherlands
Mr. J.van Woerkom
Phone: +31 10 4943 940
Telefax: +31 10 4297 587
E-mail:
info@weteringrotterdam.com

Rugova Diesel Repair B.V.
Keizerlaan 38
3233 VT Oostvoorne
The Netherlands
M. Daghrir
Phone: +31 181 40 2359
Telefax: +31 181 40 2688
E-mail:
rugovadieselrepair@yahoo.com

Goltens Rotterdam B.V.
Lorentzweg 29
3208 LT Spijkenisse
The Netherlands
Phone: +31 181 465 100
Telefax: +31 181 465 109
E-mail: rotterdamr@goltens.com

Maarten Jeronimus, MD
NICOVERKEN Algerastraat 20
3125 BS Schiedam
The Netherlands
Frans van Krugten, *MD*
Phone: +31 10 238 0999
Telefax: +31 10 238 0990
E-mail: shiprepair@nicoverken.nl

USA — Country Code: +1

Engineering & Machinery Consultants, Inc.
8015 Sports Haven Dr,
Humble, TX 77346, , U.S.A
Mr. Jong, Lee
Phone: +1 281 900 0901
Telefax: +1 281 947 9744
E-mail: emc.jong@hotmail.com

Nicaragua — Country Code: +505

Service De Ingenieria Electrica HANUMUL
Reparto Bolonia, Rotonda Plaza
Espana 2c oeste,1c norte,1c oeste,
2c norte, Managua, Nicaragua
Jin Kook, Kim (Juan Kim)
Phone: +505 276 1943
Mobile: +505 948 3189
Telefax: +505 2266 1029
E-mail: juankimnica@gmail.com

Ecuador — Country Code: +593

HBS ECUADOR
Los Rios 600 y
Quisquis Guayaquil,
Ecuador
Phone: +593 4 269 0199
Telefax: +593 4 239 6212
E-mail: ibc2005@hotmail.com

China(Shanghai) — Country Code: +86

LOGSHIP Limited
Rm312, 3F, Huadu Tower,
No.828, Zhangyang Road,
Shanghai, China, 200122
Mr. Keun oh, Park
Phone: +86 21 6156 1999
Telefax: +86 21 5156 1900
E-mail: lancer@logship.co.kr

Pacific Marine
No.25 Lane 372, North Yong-
Chun Rd. Da Tuan Town,
Nan Hui Area, Shanghai, China
Wu Jiang Wei
Phone: +86 21 5808 6906
Telefax: +86 21 5808 6906
E-mail:
pacificmarine@vip.163.com

Star Power Co., Ltd.
RM912 Hyunyoon International
Bldg.#1100 Wuzhong road,
Shanghai China, 201103
Jong Hwan Oh, PhD.
Phone: +86 21 5422 4157
Telefax: +86 21 5422 4156
E-mail: hwankong@gmail.com

Vietnam — Country Code: +84

CORONA T.S Co., Ltd.
89 Vanh Dai Trong,
Binh Tri Dong B Ward,
Binh Tan dist,
Ho Chi Minh city, Vietnam.
L.K. Vi
Phone: +84 8 2539499
Telefax: +84 8 7526945
E-mail: lkv@corona.com.vn

Germany — Country Code: +49

Turbo-Technik Reparatur-Werft GmbH & Co.
Hannoversche Strabe 11
D-26384 Wilhelmshaven
Germany
Martin M. Dassler
Phone: +49 4421 3078 0
Telefax: +49 4421 3050 86
E-mail: info@turbotechnik.com

www.hhi.co.kr
www.hyundai-engine.com

We build a better future

HYUNDAI
HEAVY INDUSTRIES CO.,LTD.

ENGINE & MACHINERY

Diesel Power Plant Sales Dep't

1000, Bangeojinsunhwan-doro,
Dong-gu, Ulsan, Korea

Engine Sales Department(Domestic)
Tel: 82-52-202-7291~9
Fax: 82-52-202-7300
E-mail: k110@hhi.co.kr

Engine Sales Department(Export)
Tel: 82-52-202-7281~9
Fax: 82-52-202-7427
E-mail: k150@hhi.co.kr

Diesel Power Plant Sales Department
Tel: 82-52-202-7301~7310
Fax: 82-52-202-7202
E-mail: k120hhi@hhi.co.kr

copyright ⓒ 2011 Hyundai Heavy Industries

A02-113-01 DEC. 2011

Contents subject to change without prior notice.